HindPhotostat

Hind Photostat & Book Store

Best Quality Classroom Topper Hand Written Notes to Crack GATE, IES, PSU's & Other Government Competitive/ Entrance Exams

MADE EASY
ELECTRONICS ENGINEERING
CO -FOR GATE
BY-SAGAR

- Theory
- Explanation
- Derivation
- Example
- Shortcuts
- Previous Years Question With Solution

Visit us:-**www.hindphotostat.com**

Courier Facility All Over India
(DTDC & INDIA POST)
Mob-9311989030

HindPhotostat

GET IT ON Google Play

MADE EASY , IES MASTER , ACE ACADEMY , KREATRYX

ESE , GATE, PSU BEST QUALITY TOPPER HAND WRITTEN NOTES
MINIMUM PRICE AVAILABLE @ OUR WEBSITE

1. ELECTRONICS ENGINEERING
2. ELECTRICAL ENGINEERING
3. MECHANICAL ENGINEERING
4. CIVIL ENGINEERING
5. INSTRUMENTION ENGINEERING
6. COMPUTER SCIENCE

IES ,GATE , PSU TEST SERIES AVAILABLE @ OUR WEBSITE

- IES –PRELIMS & MAINS
- GATE

➢ NOTE;- ALL ENGINEERING BRANCHS

➢ ALL PSUs PREVIOUS YEAR QUESTION PAPER @ OUR WEBSITE

PUBLICATIONS BOOKS -

MADE EASY , IES MASTER ,ACE ACADEMY ,KREATRYX ,GATE ACADEMY, ARIHANT ,GK

RAKESH YADAV, KD CAMPUS , FOUNDATION , MC –GRAW HILL (TMH) ,PEARSON...OTHERS

HEAVY DISCOUNTS BOOKS AVAILABLE @ OUR WEBSITE

F230, Lado Sarai New Delhi-110030 Phone: 9311 989 030	Shop No: 46 100 Futa M.G. Rd Near Made Easy Ghitorni, New Delhi-30 Phone:9711475393	F518 Near Kali Maa Mandir Lado Sarai New Delhi-110030 Phone: 9560 163 471	Shop No.7/8 Saidulajab Market Neb Sarai More, Saket, New Delhi-30

Website: www.hindPhotostat.com

Contact Us: 9311 989 030

Courier Facility All Over India

(DTDC & INDIA POST)

Computer Organization

- father of computer → Chade's Babbage
- 1st Electronic computer ⇒ ENIAC
  (Electronic Nuemerical Integrator and Calculator)

Computer ⇒ It is a fast electronic calculating machine which accepts digitized i/p information and Processes it with the help of internally stored instructions known as program and produces the resultant O/P information.

Block dig diagram of computer ⇒

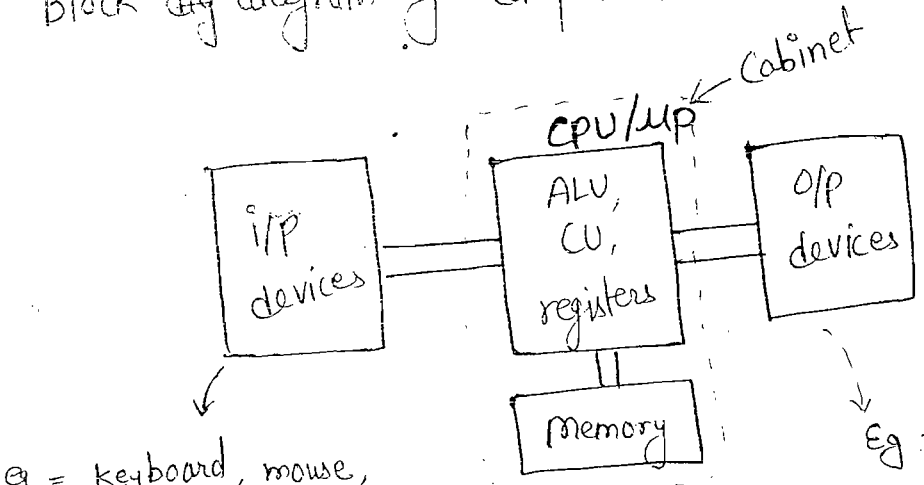

Eg = keyboard, mouse, scanner, microphone, Joysticks

Eg ⇒ monitor, Display, Printer, loudspeaker

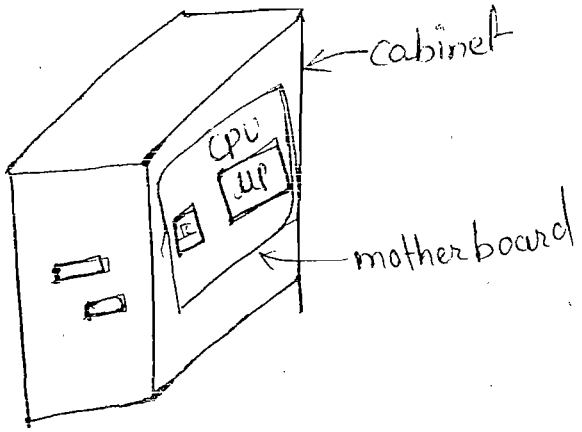

- first computer has issues in → 1) Vacuum tube
  2) Electrical issue
  3) mechanical issue
  4) large weight

  this issue resolved by using → transistor (smaller, faster, less Power)

- transistor invented by John Bardeen, william Sockley, waltair Brattain.

- 1st gen. computer made of vacum tube,
  2nd gen computer made of by using X sistor.
  3rd gen. computer —— // —— IC.

IC
SI MSI LSI VLSI

SI (small scale Integration) < 10 transistor
MSI = 10 – 100 —— // ——
LSI = 100 – 1k transistor
VLSI = > 1k / 10k transistor

- Microprocessor (μp) ⇒ it is a semiconductor component design by using VLSI technologies. and it contain ALU, CU and registers of a CPU. in a single package

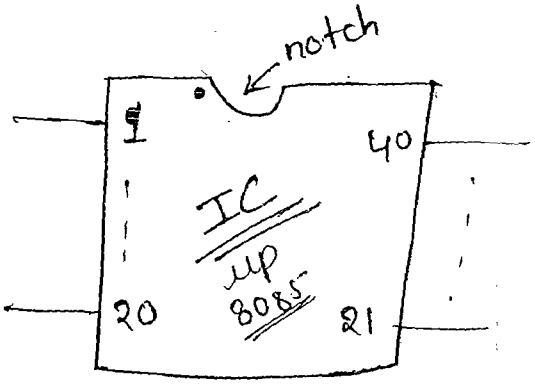

Note for a basic μp (microprocessor), memory is connected externally. the registers inside the processor can not be

considered as memory as their used to store or hold the data temporarily.

- In latest processor some memory present inside to store frequently used data and instruction, known as cache memory.

- Functions of computer ⇒
  (1) Data storage
  (2) Data processing
  (3) Data movement
  (4) Data Control

- functionality of computer ⇒
  stored program concept ⇒ invented by John Von neumann

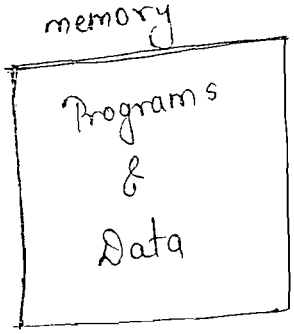

Computer uses binary language : 1 and 0

Bit ⇒ Binary digit ⇒ 0, 1 , bits denotes by b

Nibble ⇒ 4 bits

Byte ⇒ 8 bits bytes denotes by B

word length ⇒ depends on type of up
⇒ no. of bits that can be processed by a Processor parallely at a time in the ALU.
⇒ no. of bits that can be accessed from memory at a time (either for read or write operatio

⇒ the processor are generally identified by number of data bits that can be handle at a time that is word length.

word length

⊙ 1st up manfactured → Intel 4004 (1971) → 4 bit up

1972 → Intel 8008 → 8 bit up / 1 byte

1974 → Intel 8080 → 8 bit up

1976 → Intel 8085 → 8 bit up

1st up used for commercial application

→ Intel 8086 → 16 bits / 2 bytes

→ Intel 80186 ⇒ 32 bit up
Intel 80386

Pentium ... Dual core ... i_3

IC

Dual core → having 2 CPU

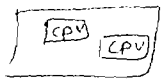

- Computer works in binary language, but in real work all are in analogous form. so need a interface circuit physical parameters to convert ~~and~~ analogous signal to binary and binary to analogue signal.

Ex. → ADC, DAC,

physical parameter → light
→ temperature
→ Pressure
→ humidity

microcontroller

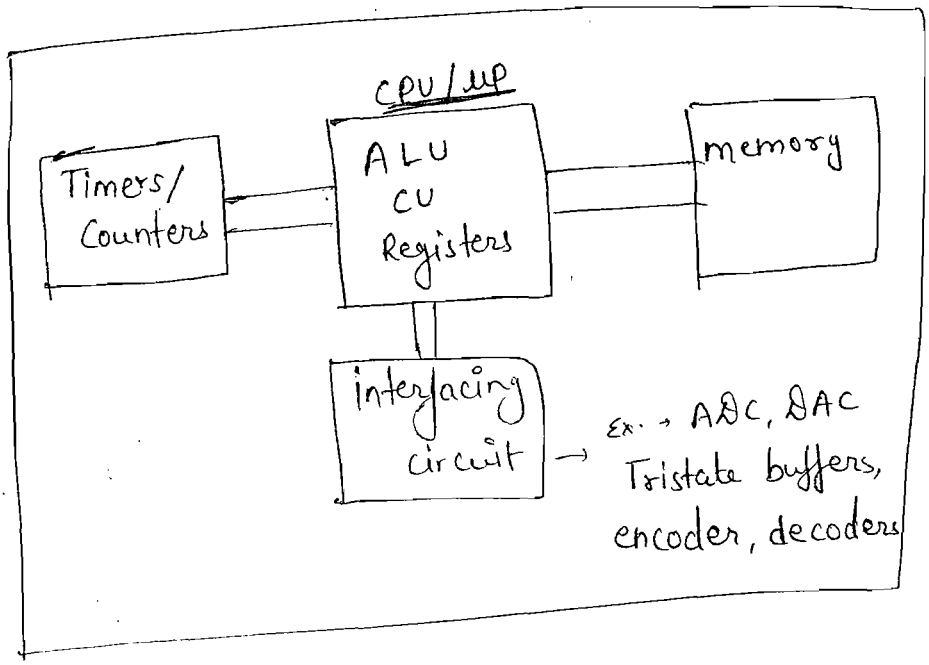

difference b/w µp and µC.

µp	µC
1) it has ALU, CU and registers	1) has ALU, CU and Registers.
2) No internal memory	2) has internal / on-board memory
(3) No interfacing circuits. Timers / counters	3) has interfacing circuits, timer / counter.
4) used for general purpose application. Example :- computer, mobile,	4) Used for specific purpose application. Example ⇒ home applications like AC, washing mach microwave oven, Refrigerat mouse, defence, medica equipment, lab, Commun
5) Requires more memory	(5) Require less memory because specific purpose
(6) More hardware	(6) less hardware
7) Costly	(7) Cheap
8) Example of µp ⇒ intel 8085, i_3, i_4, motorola,	(8) µC → 1st µc → TMS1000 (4 bit) intel 8051 (8 bit)

- Depending on how programs and data are stored in the memory there are two type of architecture

Von-Neumann (or) Princeton Architector

Example - Intel 8085, intel 8086

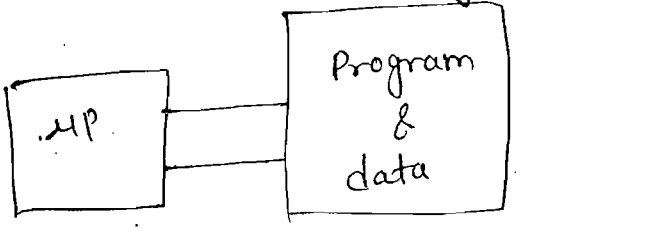

Harvard Architector

Example → intel 8051 µC

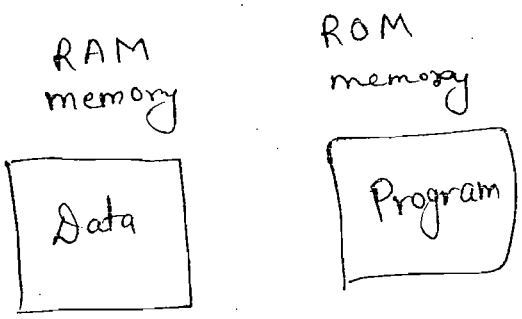

Basic operations of µP →

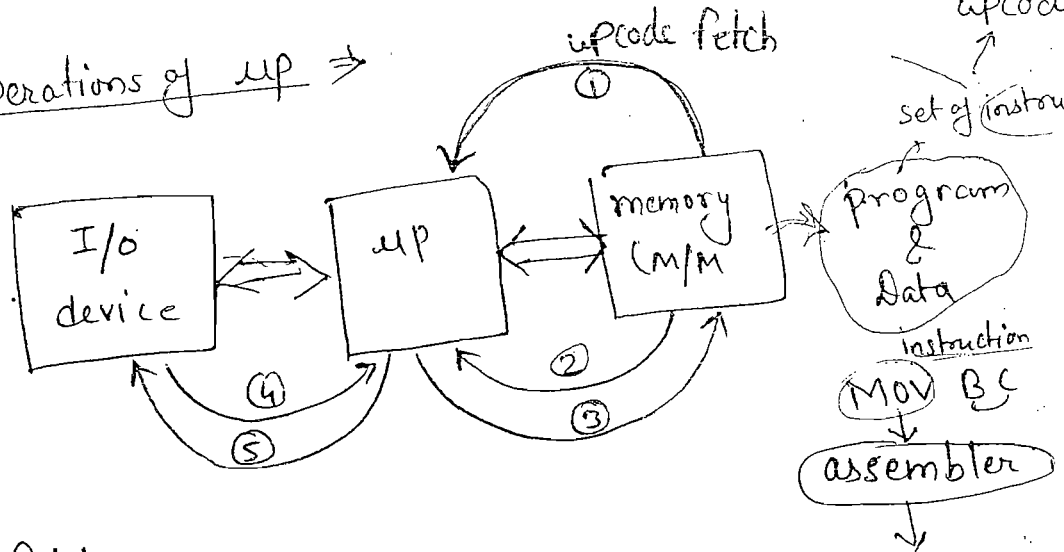

operational code
opcode
set of instruction
instruction
MOV B,C
assembler
machine language
(0100 0001)
41 H

1) opcode fetch
2) memory Read (M/M read)
3) memory write (M/M write)
4) I/O read
5) I/O write

1) opcode fetch ⇒ Reading or accessing the instruction i.e. opcode or operational code from memory into processor. (in some instructions executions may also be completed in fetch operation with respect to certain processor like 8085)

2) M/M read ⇒ reading or accessing data from memory into Processor.

3) M/M write ⇒ sending or transffering data to memory from the ~~profes~~ processor.

4) I/O read ⇒ Reading # or accessing data from i/p port or device into processor.
Port indicates connection of an I/O device.

5) I/O write ⇒ sending or transferring data to the o/p port or device.

Note
- with respect to memory, there is no difference b/w instruction and data both are present in binary form.
- generally the processor can perform two basic operation read and write w.r.t. memory and I/O device.

Computer Architecture ⇒

1) attributes of a s/s visible to a programmer (or) that have direct impact on logical execution of a program
Example ⇒ Instruction set design,
Addressing modes

(or)

2) study of functional operation of individual hardware units w.r.t Computer s/s along with flow of information b/w them through proper controlled among them.

Computer organization ⇒

- it reffers to the operational units and ~~——~~ and there interconnection that realize the architectural specification.
- Computer organization involves
  (1) memory S/s
  (2) M/M interconnection
  (3) Design of CPU
- When a new computer has to be design, performance, efficiency at the same time, cost, power consumption, availability should also be taken into care.
- Basic classes of computer ⇒
  - (1) PMD → (Personal mobile Device)
  (2) Desktop computer
  (3) Servers
- because of software as a service many applications are possible like search, gaming, web application etc.
- few servers are connected ~~to~~ through the lane,
- if thousand of such servers are required for a certain applications it is known as warehouse scale
- In other complex applications at high end like weather forecasting, scientific research, space technology ~~sq~~ super computer used,
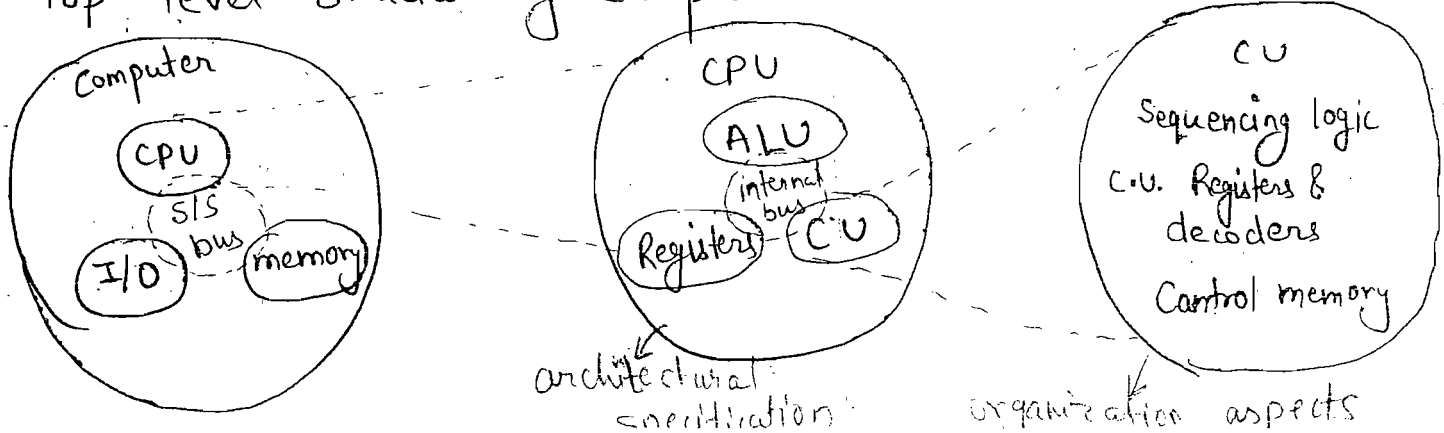
Top level structure of computer ⇒